MASONITE

CENTURION
LITE FRAME INSERT

DOORGLASS ASSEMBLY
FOR GLAZING UP TO A 3'0 x 8'0" SINGLE PANEL
"NON-IMPACT"

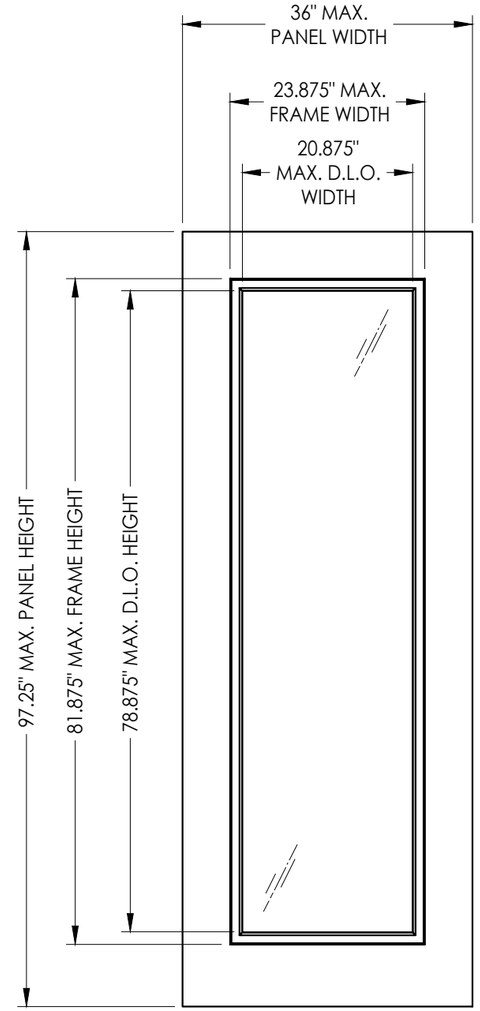

L.F. SCHMIDT
LICENSE
No. 43409
STATE OF FLORIDA
PROFESSIONAL ENGINEER

Digitally signed by Lyndon F Schmidt
Date: 2023.08.21 12:32:33 -04'00'

This item has been digitally signed and sealed by **L. F. Schmidt, P.E.** on the date adjacent to the seal.

Printed copies of this document are not considered signed and sealed and the signature must be verified on any electronic copies.

THIS PRODUCT APPROVAL IS VALID ONLY FOR THE STATE OF FLORIDA

GENERAL NOTES

1. This product has been evaluated and is in compliance with the 8th Edition (2023) Florida Building Code (FBC) structural requirements including the High Velocity Hurricane Zone (HVHZ).
2. When used in the "HVHZ", this product is required to be protected with an impact resistant covering that complies with Section 1626 of the FBC.
3. This product meets the water infiltration requirements for "HVHZ".
4. This product is approved for use as a substitute doorglass assembly in conjunction with a glazed fiberglass side hinged swing door and/or fixed sidelite possessing a comparable current Florida Statewide product approval.
5. The design pressure (DP) rating shall be the lesser of the DP rating shown on Sheet 1 of this approval or the DP rating shown in the glazed fiberglass side hinged swing door or fixed sidelite approval being used.
6. The door panel and lite opening size shall not exceed the sizes shown in this approval or the glazed fiberglass side hinged swing door or fixed sidelite approval being used.
7. This product has been tested in the door and/or sidelite panels as specified on Sheets 3 & 4 of this approval. Substitution into a similar product may be approved for use by the local Authority Having Jurisdiction. In all cases, the glazed fiberglass door and/or sidelite used must possess a comparable current Florida Statewide product approval.

TABLE OF CONTENTS

SHEET #	DESCRIPTION
1	Typical elevations, design pressures & general notes
2	Lite frame & glazing details
3	Fiberglass door panels (6'-8")
4	Fiberglass door panels (8'-0")

DESIGN PRESSURE RATING (PSF)			
DOOR TYPE	DOOR HEIGHT	POSITIVE	NEGATIVE
FIBERGLASS	6'-8"	+60.0	-60.0
	8'-0"	+50.0	-50.0

Documents Prepared By:
Lyndon F. Schmidt
P.E. No. 43409
RW BUILDING CONSULTANTS, INC.
P.O. Box 230, Valrico, FL 33595
Phone No.: 813.659.9197
FBPE Registry License No. 9813

PRODUCT: MASONITE CENTURION LITE FRAME

PART OR ASSEMBLY: TYPICAL ELEVATIONS, DESIGN PRESSURES & GENERAL NOTES

REVISIONS

NO.	DATE		BY
1	8/21/23	UPDATE TO 8TH ED. (2023) FBC	LFS

DATE: 10/05/22
SCALE: N.T.S.
DWG. BY: LFS
CHK. BY: RW
DRAWING NO.: FL-41718.1
SHEET 1 OF 4

© 2022 R.W. BUILDING CONSULTANTS INC.

Z:\2023 FBC Drawings\Masonite International\FL-41718 R1\FL-41718.1.dwg

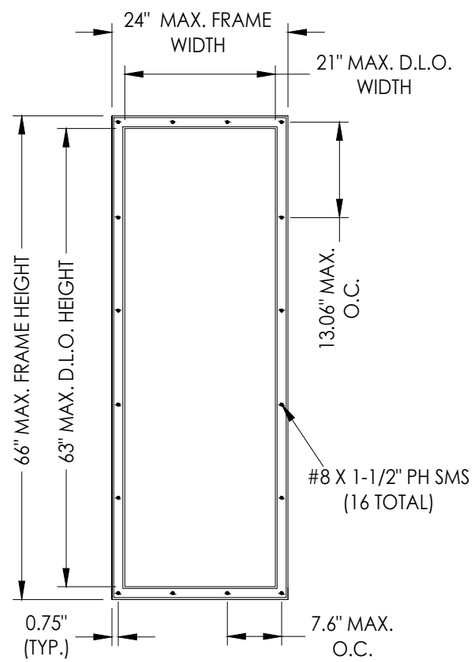

CENTURION PROFILE LITE FRAME
6'-8" DOOR/SIDELITE

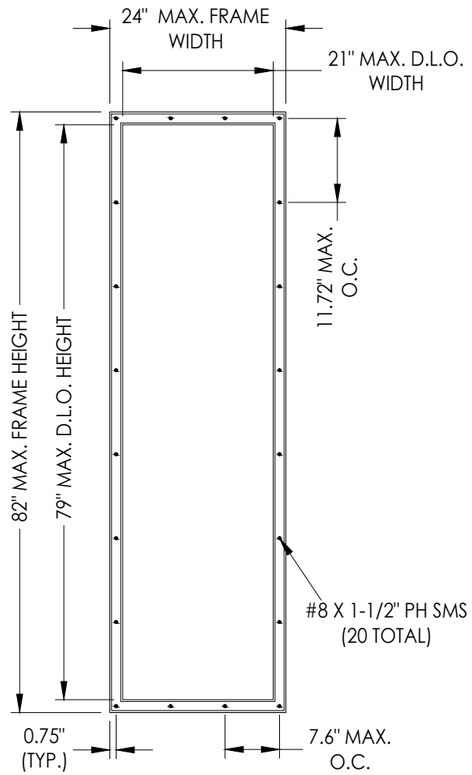

CENTURION PROFILE LITE FRAME
8'-0" DOOR/SIDELITE

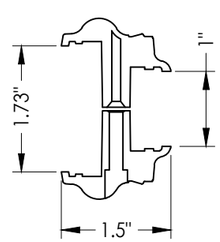

CENTURION PROFILE LITE FRAME
HP POLYPROPYLENE

* HOT-MELT ELASTOMER

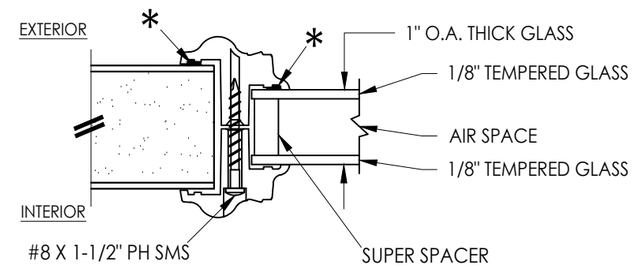

G1 **GLAZING DETAIL**
CENTURION LITE FRAME

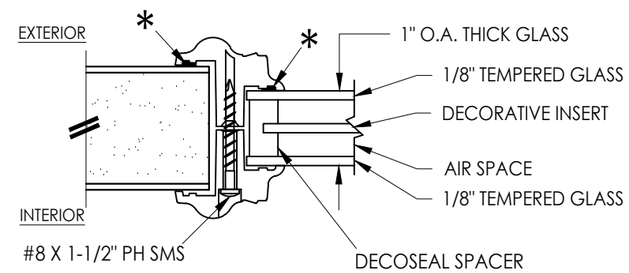

G2 **GLAZING DETAIL**
CENTURION LITE FRAME

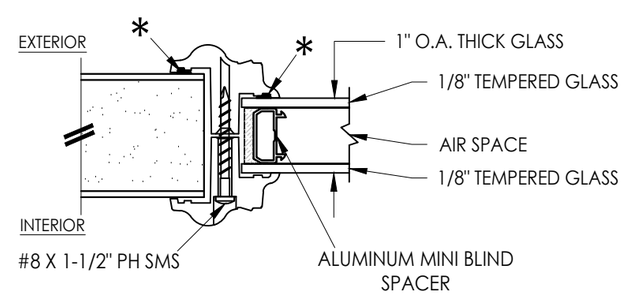

G3 **GLAZING DETAIL**
CENTURION LITE FRAME

Documents Prepared By:
Lyndon F. Schmidt
P.E. No. 43409

RW BUILDING CONSULTANTS, INC.
P.O. Box 230, Valrico, FL 33595
Phone No.: 813.659.9197
FBPE Registry License No. 9813

PRODUCT: MASONITE CENTURION LITE FRAME

PART OR ASSEMBLY: LITE FRAME & GLAZING DETAILS

NO.	DATE	REVISIONS	BY
1	8/21/23	UPDATE TO 8TH ED. (2023) FBC	LFS

DATE: 10/05/22
SCALE: N.T.S.
DWG. BY: LFS
CHK. BY: RW
DRAWING NO.: FL-41718.1
SHEET 2 OF 4

© 2022 R.W. BUILDING CONSULTANTS INC.

Z:\2023 FBC Drawings\Masonite International\FL-41718 R1\FL-41718.1.dwg

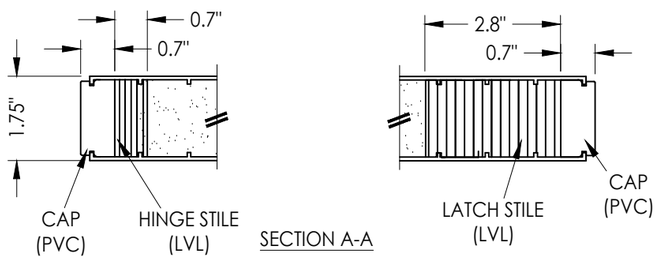

SECTION A-A

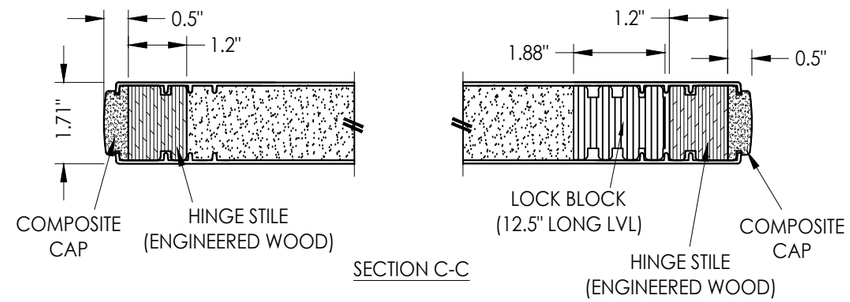

SECTION C-C

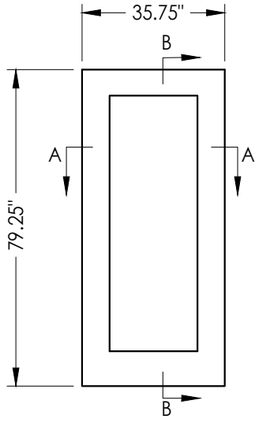

FIBERGLASS DOOR PANEL
Plastpro 6'-8"

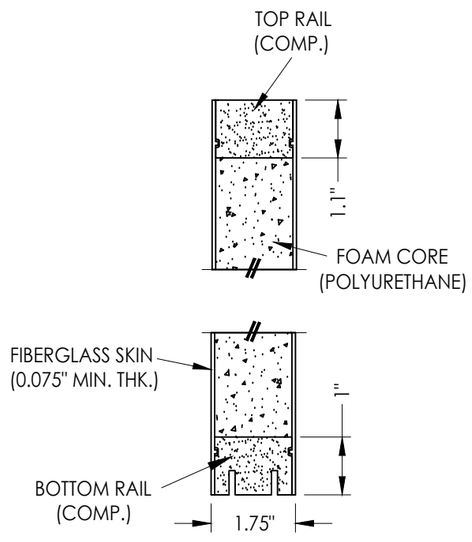

SECTION B-B

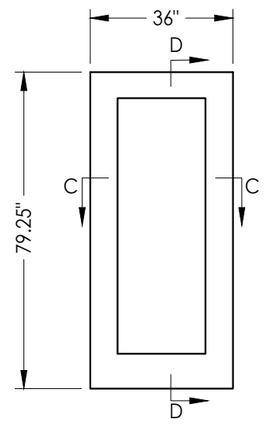

FIBERGLASS DOOR PANEL
Therma-Tru 6'-8"

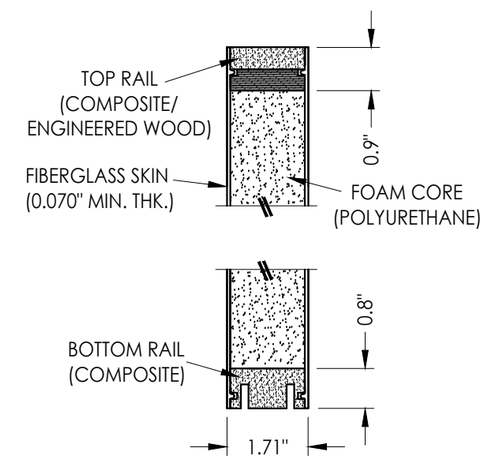

SECTION D-D

Documents Prepared By:
Lyndon F. Schmidt
P.E. No. 43409

RW BUILDING CONSULTANTS, INC.
P.O. Box 230, Valrico, FL 33595
Phone No.: 813.659.9197
FBPE Registry License No. 9813

PRODUCT: MASONITE CENTURION LITE FRAME

PART OR ASSEMBLY: FIBERGLASS DOOR PANELS (6'-8")

NO.	DATE	REVISIONS	BY
1	8/21/23	UPDATE TO 8TH ED. (2023) FBC	LFS

DATE: 10/05/22
SCALE: N.T.S.
DWG. BY: LFS
CHK. BY: RW
DRAWING NO.: FL-41718.1
SHEET 3 OF 4

© 2022 R.W. Building Consultants Inc.

Z:\2023 FBC Drawings\Masonite International\FL-41718 R1\FL-41718.1.dwg

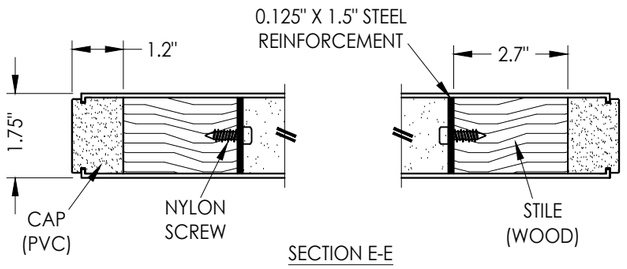

SECTION E-E

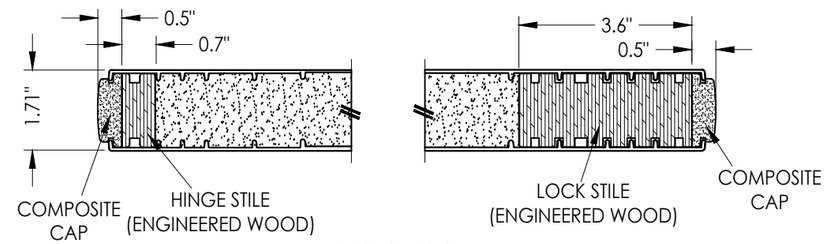

SECTION G-G

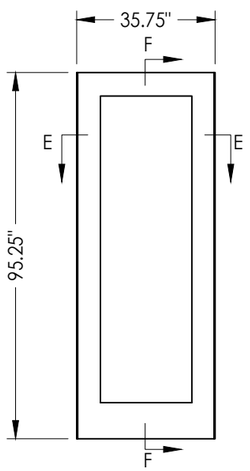

FIBERGLASS DOOR PANEL
Plastpro 8'-0"

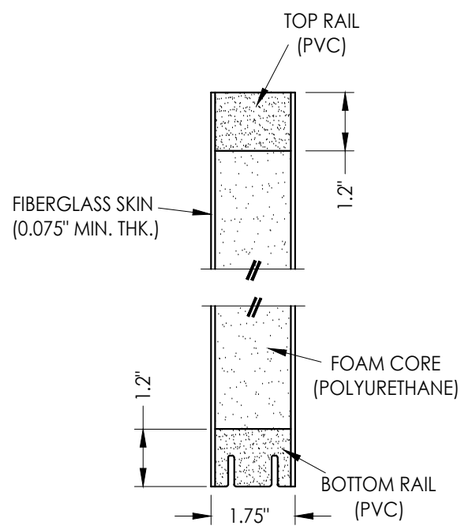

SECTION F-F

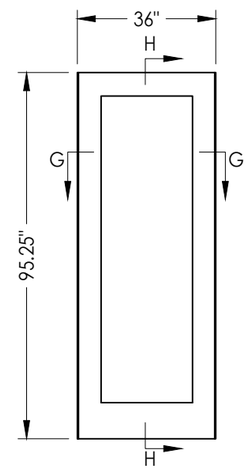

FIBERGLASS DOOR PANEL
Therma-Tru 8'-0"

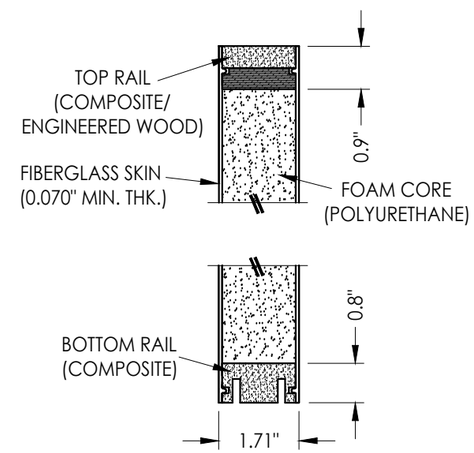

SECTION H-H

Documents Prepared By:
Lyndon F. Schmidt
P.E. No. 43409

RW BUILDING CONSULTANTS, INC.
P.O. Box 230, Valrico, FL 33595
Phone No.: 813.659.9197
FBPE Registry License No. 9813

PRODUCT: *MASONITE CENTURION LITE FRAME*

PART OR ASSEMBLY: *FIBERGLASS DOOR PANELS (8'-0")*

REVISIONS

NO.	DATE		BY
1	8/21/23	UPDATE TO 8TH ED. (2023) FBC	LFS

DATE: 10/05/22
SCALE: N.T.S.
DWG. BY: LFS
CHK. BY: RW
DRAWING NO.: FL-41718.1
SHEET 4 OF 4

© 2022 R.W. BUILDING CONSULTANTS INC.

Z:\2023 FBC Drawings\Masonite International\FL-41718 R1\FL-41718.1.dwg